ELSEVIER

Journal of Neuroscience Methods 148 (2005) 19–25

JOURNAL OF NEUROSCIENCE METHODS

www.elsevier.com/locate/jneumeth

A liquid-delivery device that provides precise reward control for neurophysiological and behavioral experiments

Andrew R. Mitz *

Laboratory of Systems Neuroscience, National Institute of Mental Health, 49 Convent Drive MSC 4401, Bethesda, MD 20892-4401, USA

Received 18 October 2004; received in revised form 18 November 2004; accepted 19 November 2004

Abstract

Behavioral neurophysiology and other kinds of behavioral research often involve the delivery of liquid rewards to experimental subjects performing some kind of operant task. Available systems use gravity or pumps to deliver these fluids, but such methods are poorly suited to moment-to-moment control of the volume, timing, and type of fluid delivered. The design described here overcomes these limitations using an electronic *control unit*, a pressurized *reservoir unit*, and an electronically controlled solenoid. The *control unit* monitors reservoir pressure and provides precisely timed solenoid activation signals. It also stores calibration tables and does on-the-fly interpolation to support computer-controlled delivery calibrated directly in milliliters. The reservoir provides pressurized liquid to a solenoid mounted near the subject. Multiple solenoids, each supplied by a separate *reservoir unit* and *control unit*, can be stacked in close proximity to allow instantaneous selection of which liquid reward is delivered. The precision of droplet delivery was verified by weighing discharged droplets on a commercial analytical balance.
Published by Elsevier B.V.

Keywords: Fluid dispenser; Behavioral neurophysiology; Automated reinforcement; Reward delivery

1. Introduction

The value of a primary reinforcer depends upon the quantity of the reinforcer, the relative timing between the reinforcer and the recipient's response, and the recipient's preference for the reinforcer, among other factors. Whereas many behavioral experiments are relatively insensitive to small variations in the features of reward delivery, certain classes of experiments require careful control of all three features just mentioned: quantity, timing, and preference. Described here is an instrument that can provide the needed precision in experiments where liquids are used as a primary reinforcer. Using this device, the amount, timing, and type of liquid presented as primary reinforcement are under direct, moment-to-moment experimental control.

Although suitable for other behavioral applications, the liquid-delivery device was developed for primate behavioral neurophysiological experiments. Neurophysiologists have identified a number of brain areas with neurons sensitive to the timing, amount, or quality of a primary reinforcer. Some neurons, for example, are highly sensitive to the time of reinforcement delivery (Fiorillo et al., 2003), others on its quantity (Cromwell and Schultz, 2003), and yet others on the level of preference for the reward (Tremblay and Schultz, 1999; Watanabe et al., 2002). Further investigation of these findings will benefit from greater control of rewards than traditional liquid-delivery systems provide.

The following design criteria guided the development of a new precision liquid-delivery device:

- delivery of water and more viscous liquids (e.g., apple sauce)
- accurate and consistent delivery of volumes as small as 0.05 ml
- computer-control of delivery volumes
- delivery initiation within 10 ms of an external event
- delivery volume independent of suction on the liquid tube
- capacity for moment-to-moment selection of different liquids

* Tel.: +1 301 402 5573; fax: +1 301 402 5441.
E-mail address: arm@nih.gov.

0165-0270/$ – see front matter. Published by Elsevier B.V.
doi:10.1016/j.jneumeth.2005.07.012

- rapid, simple readjustment when the liquid type is changed
- minimum reservoir capacity of 350 ml
- easy maintenance

Existing liquid-delivery systems do not meet these requirements. Simple gravity-driven liquid dispensers (e.g., Crist Instrument model RLD-E1) do not work well with thicker liquids, are often inconsistent in their delivery volumes, and are sensitive to suction by the animal. When thicker liquids are used, different viscosity liquids tend to be delivered at very different rates. Peristaltic pump systems (e.g., Crist Instrument model 5-RLD-E4) can provide better performance with thicker liquids, but the pump is generally difficult to position near the animal. Motor-operated syringe pumps have the same positioning limitation. In both designs a long liquid-delivery tube is required. Because the tube acts as a reservoir, its length, internal diameter, and distensibility can impact the consistency of volume delivery for viscous solutions or varying loads (e.g., suction by the animal). Stiff, narrow tubing can reduce delivery variations but is more difficult to handle and may clog more easily. Motor-operated syringe pumps and peristaltic pumps may be slow at initiating liquid-delivery, depending upon the implementation.

The delivery device described here circumvents the shortcomings of earlier designs by combining three important design features. First, a pressurized bottle holds the fluid to make its delivery independent of gravity effects, suction or moderate resistance. Second, a small solenoid placed in close proximity to the delivery tube gates the flow. Using a pressurized supply line and placing the solenoid close to the delivery point obviates the need for long delivery tubes and assures the quick release of liquid. Third, a microcontroller controls delivery by calculating delivery parameters on-the-fly based on stored calibration tables. The microcontroller also provides multiple modes of operation, tracks liquid usage, and provides a sophisticated user interface.

2. Materials and methods

2.1. General description and design features

The new liquid-delivery device has three major components: an electronic *control unit*, a *reservoir unit*, and a solenoid (Fig. 1). The solenoid is an electrically activated valve that is mounted near the animal's mouth. It releases pressurized liquid when activated by electrical pulses. The *reservoir unit* supports the liquid bottle (reservoir) and regulates air pressure to the bottle. The *reservoir unit* also provides digitized pressure data to the *control unit*. The *control unit* houses a power supply and a microcontroller. It has a front panel interface for basic operation, both parallel and serial interfaces for communicating with a host computer, and a web-based interface for updating calibration tables and displaying status information.

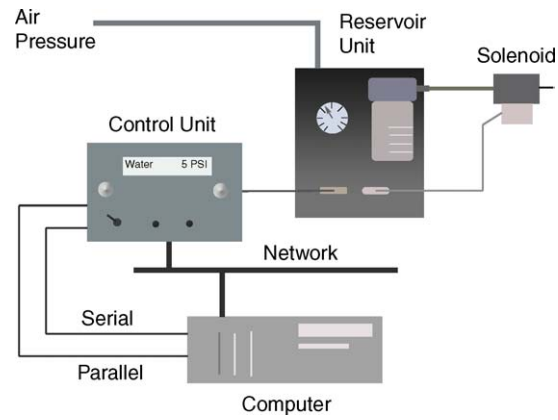

Fig. 1. Sketch of liquid dispenser system. A bottle on the *reservoir unit* is pressurized by an external air source. The liquid inside the pressurized bottle fills a tube leading to the solenoid. The *control unit* responds to signals from the host computer with preprogrammed on-off voltage pulses to activate the solenoid, releasing the liquid. The *control unit* calculates solenoid opening times using internal calibration tables. A network connection allows the *control unit* to serve web pages to the host or other computer for status displays and calibration.

Proof of concept and mechanical design was carried-out on a contract basis by Mechatronic Solutions (Millersville, MD), a company with prior design experience in primate feeding devices (Mitz et al., 2001). Using a test platform, liquids of varying viscosities were delivered from a pressurized container at different pressure levels. Five liquids were chosen for testing: water and four types of puréed baby foods (peaches, pears, apple sauce, and bananas). Parametric testing provided operating region information for each of the food types. Fig. 2 shows the results of a typical test series. With 6.0 psi of pressure, the test bed delivered between 0.11 and 5.0 ml of water using solenoid opening durations of 10.0–500.0 ms. Compared to water, baby foods required

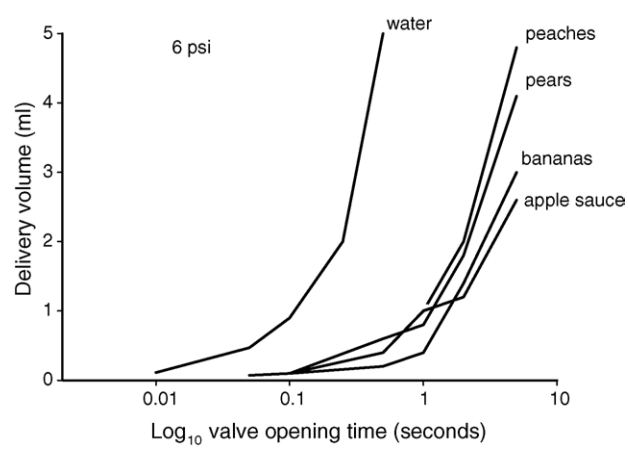

Fig. 2. Test bed results. Liquid-delivery volumes are plotted as a function of valve opening times. This is one series of measurements made with a test bed early in dispenser design. Volumes of tap water and four flavors of puréed baby food were tested using a range of solenoid opening times. Note that time is a decimal log scale. Baby foods require approximately an order of magnitude longer opening times than water at the test pressure, 6.0 psi.

approximately one order of magnitude greater solenoid times to deliver the same volumes. Similar data was collected using pressures of 4.0, 8.0, and 10.0 psi. Other tests investigated trial-to-trial repeatability, day-to-day repeatability, and a test of solenoid time versus liquid volume linearity for small volumes (0.05–1.0 ml). There were three important results: (1) small volumes could be delivered with excellent repeatability; (2) by choosing a pressure setting appropriate for the liquid, an order of magnitude range of delivery volumes could be controlled precisely by varying the solenoid activation time; and (3) relatively low-cost materials could be used in the pressurized part of the system, because the required pressure levels were modest (<20 psi). Mechatronic Solutions finished the initial mechanical design and constructed a prototype system. The author designed the electronics and developed the firmware for both the prototype and production systems. A completed prototype was provided to Micron Systems (Sykesville, MD) for some repackaging, additional documentation, and a small production run (6 units).

2.2. Production unit implementation

The *reservoir unit* serves the primary liquid and air pressure handling tasks (Fig. 3). The unit is an open frame design with a footprint of 23.0 cm × 25.5 cm and 29.5 cm of vertical clearance. Most of the air-handling components are mounted on the rear. A liquid trap and a 30-psi relief valve mounted on the rear are in the air-handling path to protect the pressure regulator, which protrudes through the front panel along with a mechanical pressure gauge, and three status LEDs. Air pressure requirements for operation are typical of a laboratory air supply (∼20–30 psi). This pressure level is also compatible with industrial air pressure units or bottled air, as long as a suitable regulator is used. The *reservoir unit* has its own shutoff valve so that multiple units can be supplied from a single air pressure source with some independence.

Electrical connectors and the pressurized reservoir bottle are mounted on the front of the *reservoir unit* for easy access (Fig. 3). Pressure must be off to remove the reservoir bottle for cleaning or refilling. The pressure regulator is critical to proper operation. It maintains a fixed pressure level in the plastic reservoir bottle. For each liquid used, the pressure must be adjusted for consistent liquid-delivery over the range of delivery volumes. The correct pressure is determined empirically. For water, the preferred pressure is 5.0 psi. With this pressure, valve-timing control in the range of ∼10–320 ms can be used to accurately deliver volumes between ∼0.05 and 1.50 ml. The air pressure is set manually and monitored by a 0–30 psi pressure gauge and a piezoresistive pressure sensor (Motorola MPX2200AP). The bottle is a dishwasher safe plastic container, originally designed to house a fluid filter. It can be removed for cleaning after shutting off the air pressure and pressing a pressure relief button on the bottle holder. The bottle is screwed on

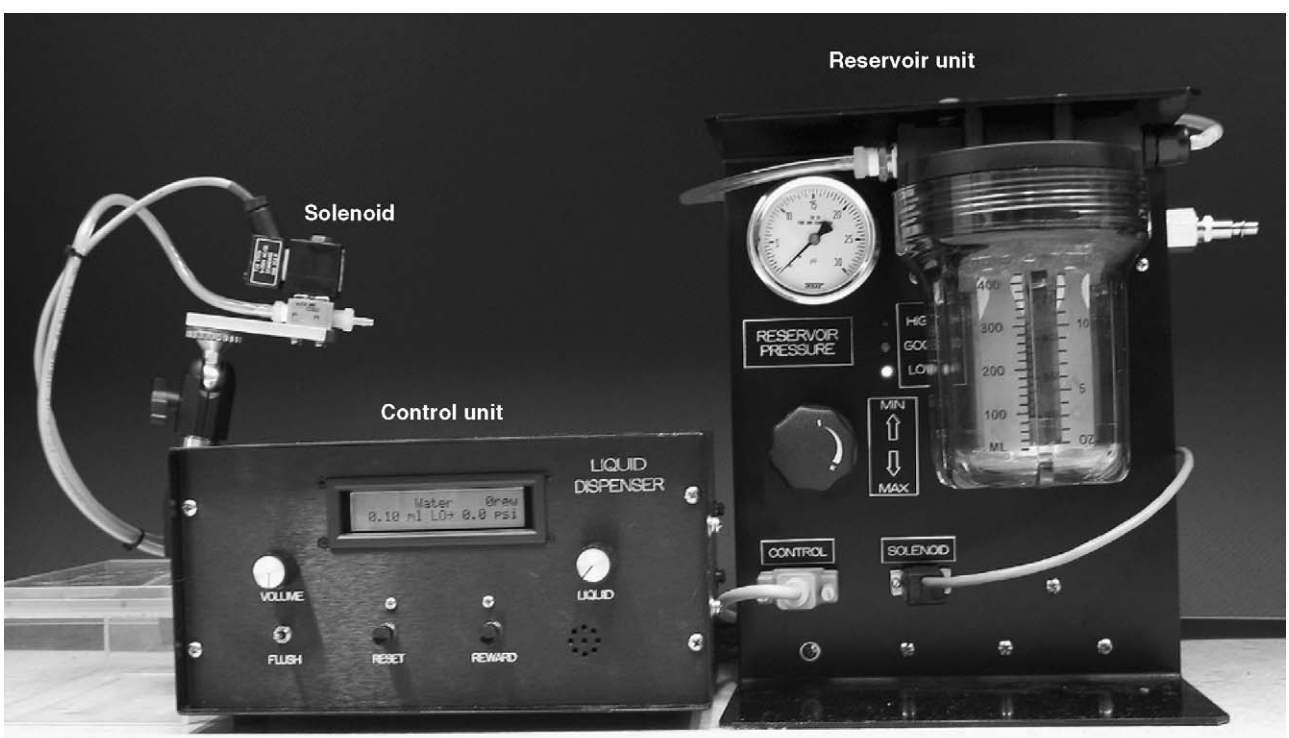

Fig. 3. Photograph of the production unit. The *control unit* on the left provides power and a programmed microcontroller for the dispenser. The *reservoir unit* manages the liquid supply and regulates pressure. Electrical and fluid lines from the *reservoir unit* supply the solenoid with pressurized fluid and precisely-timed electrical pulses for delivery near the subject's mouth.

and off by hand. A hand tool, reminiscent of an oil-filter wrench, is available for removing a stubborn bottle.

Once the required pressure level is programmed into the *control unit*, three lamps on the *reservoir unit* provide a continuous indication of pressure status (*high*, *good*, *low*, see Fig. 3). The indication simplifies regulator adjustment and warns of unexpected changes. An indicator on the *control unit* also monitors the pressure status. The pressure sensor signal is fed to a circuit board that is mounted on the rear of the *reservoir unit*. The circuit board provides signal conditioning, a voltage reference, and an AC/DC converter. The AC/DC converter communicates with the *control unit* using a serial digital protocol.

The *control unit* is a 25.5 cm × 13.5 cm × 20.5 cm deep box (Fig. 3). It houses a 24 V DC power supply that is used to derive all the necessary operating voltages. The specified power supply will operate from 100, 120, 220, or 240 V, 47–63 Hz mains. The power connector and specified fuse were chosen for 120 V operation, but can be changed to match any of the listed voltages. Housed along with the power supply is a RCM2200 microcontroller board (Rabbit Semiconductor, Davis, CA). The RCM2200 is programmed with approximately 2000 lines of C code using Dynamic C (Zworld Engineering, Davis, CA), running under a simple real-time kernel. The *control unit* provides a wide range of functions:

- monitors air pressure in the reservoir
- sets status lamps on *reservoir unit*
- calculates solenoid valve timing
- generates timed voltage pulses to activate the solenoid
- maintains tables of pressure and time settings for a list of liquids
- communicates with host computer
- serves web pages for status displays and input of calibration table values
- provides manual reward inputs
- maintains a two-line liquid crystal display (LCD) user interface
- supports maintenance, calibration, priming, and cleaning modes

The user must program a pressure-value setting and valve-open times for nine calibration points (volumes): 0.05, 0.10, 0.15, 0.25, 0.35, 0.50, 0.70, 1.00, and 1.50 ml for each liquid used. The calibration values are set via a web interface using Hypertext Markup Language (HTML) forms. A 10 base-T Ethernet port provides an interface for the local area network (LAN) connection. Once calibrated, reward volumes can be delivered from 0.05 to 10.00 ml in steps of 0.05 ml. Volumes between any two calibration points are interpolated. Volumes above 1.50 ml are extrapolated based on the 1.00 and 1.50 ml calibration points. Calibration values are retained in battery-backed random access memory (RAM). Table values for water are preprogrammed, although these values may be overwritten. A separate web page programs the correspondence between a four-bit digital input value and a corresponding reward volume (in ml). Typically, the four-bit value is taken from the digital output of a host computer. The host computer triggers a specific size reward by setting this digital value to a number greater than zero.

The user interface on the *control unit* can be set to a specific liquid to take advantage of the programmed calibration table. Alternatively, the front panel controls can be set to override the calibration tables. In this "manual mode" solenoid timing is controlled directly (0–2000 ms). Other features include a mode to lock open the solenoid for priming and cleaning and a programmable clock to deliver periodic rewards (every 1–600 s). Manually-triggered rewards can be given using a front panel switch or an external pushbutton.

The solenoid (Fig. 3) is a relatively small device (5.0 cm × 4.5 cm × 2.0 cm) that can be mounted on an aluminium plate near the delivery point (animal's mouth). Swivel mounts (PanaVise Knuckle Mounts from Edmund Industrial Optics, Barrington, NJ) simplify positioning of the solenoid (Fig. 3). The solenoid receives two connections, a pressurized liquid line from the reservoir and an electrical cable from a connector on the *reservoir unit*. The distance between the solenoid and mouth can be as short as a ∼3 cm. One key design requirement was to allow the delivery of different types (flavors, textures) of liquids on a trial-by-trial basis. To this end, multiple solenoids can be mounted on a single positioning plate and moved as a group. Each solenoid must be supplied by a separate *reservoir unit* and matching *control unit*. The output of each solenoid can then each have its own path through a segmented manifold that terminates near the animal's mouth. This arrangement avoids liquid mixing outside of the mouth.

2.3. Software and control unit operation

Software for the RCM2200 processor is loaded through a serial link using the Dynamic C development platform. Compile-time options include default network settings, defaults for the values normally adjusted through the web interface, and debugging options. The network parameters (e.g., IP address) can be changed through the serial port using a computer and terminal program (e.g., HyperTerminal).

The front panel (Fig. 3) has two dials (mechanical shaft encoders), two pushbutton switches, and a toggle switch. The dial on the right side marked *liquid* is used to select one of the liquid calibration tables from among the tables that have been programmed into the *control unit*. The *liquid* dial is also used to select menus for special operations and status displays. The dial on the left side marked *volume* can be used to set the delivery volume if only one trigger value is used. The same control is used to select an option from one of the other menus. The right front panel *reward* pushbutton delivers a reward. The *control unit* keeps an internal tally of both the total number of rewards and total volume delivered. Only the reward count is visible from the front panel. Both tallies are reported on a web page served from the *control unit*. A second front panel *reset* pushbutton resets both of these counts. When

the *control unit* is not in some other operational mode, the two-line LCD displays the liquid name, reward count, volume setting, and the pressure status of the reservoir. The *flush* toggle switch is used in multiple ways, but primarily to flush or prime the system. The flush operation must be selected using the *liquid* dial before the *flush* switch can activate the solenoid. The switch is momentary in the up position and locking in the down position.

The front panel has several status displays accessible using the *liquid* dial. The displays show the network parameters, raw data from the pressure sensor, and triggering information.

Two displays accessed with the *liquid* dial (trigger select and free reward rate adjust) work together to deliver a reward periodically. When free rewards are selected as the trigger, the *flush* lever switch enables the delivery of one reward every *N* s. *N* is set in the free reward rate menu. This periodic delivery of rewards operates independently of other reward inputs, so regular operation can be concurrent with free rewards.

The last display accessible with the *liquid* dial is manual operation. Manual operation overrides the calibration tables to provide simplified operation of the dispenser. The user sets the solenoid opening time directly in ms. Free rewards and manual operation can be used together to calibrate the delivery volumes for a new liquid. With the reward rate set at 1/s, the liquid can be delivered to a graduated cylinder hundreds of times. The average delivery volume per reward can then be calculated by reading the total delivery volume from the graduated cylinder and dividing by the reward count displayed on the LCD.

The liquid dispenser supports two direct computer interfaces, serial and parallel, and a web interface. The serial interface is used to program the RabbitCore 2200 and to change the network settings. The parallel interface is a four-bit complimentary metal oxide semiconductor/transistor–transistor logic (CMOS/TTL) compatible input with internal pull-down resistors. Bits 0–3 trigger a reward by selecting a trigger number. When all the input bits are 0, the *control unit* is ready for a new trigger. When the value changes from 0 the *control unit* translates the new value into a reward amount and initiates liquid-delivery. The reward amount is determined by an arbitrary mapping between the trigger number and a reward amount. The mapping is set and maintained through the web interface as a *trigger table*. The trigger table is set via the *control unit* web interface. The web interface is used to maintain the liquid calibration tables, change the trigger table, and to display current settings and reward statistics.

3. Results

3.1. Performance

The key performance requirement is precision in the volume of liquid delivered. A number of factors can influence the consistency of liquid-delivery. The *control unit* must provide accurately-timed pulses to the solenoid. Based on measurements using a storage oscilloscope (Tektronix TDS 210), pulse duration variation (jitter) was either within 1.5% (above 40.0 ms) or less than 200 μs (below 40.0 ms). Variability can also be introduced by the dominance of turbulence at short valve opening times or as pressure increases. Pressure sensitivity, defined here as the change in delivered volume for a 1.0 psi change in delivery pressure, should be a linear function of valve opening time unless disturbed by turbulence effects. We estimated pressure sensitivity by partially filling a graduated cylinder with tap water using eight different pressure settings (5.0, 60.0, 6.9, 8.0, 9.0, 10.0, 11.0, and 12.0 psi) for each of four valve opening times (10.0, 20.0, 30.0, and 50.0 ms). Judging from the linear relationship ($r > 0.99$), turbulence is not a problem over this range (Fig. 4). Fig. 4 also shows that pressure sensitivity is modest (below 0.05 ml/psi) over the same range. These low sensitivity values, and the very low flow rates required for reward delivery, provide favorable conditions for the precision pressure regulator. Pressure should be extremely stable under these conditions, and thus droplet-to-droplet size should be very well controlled.

We verified the delivery precision by delivering single droplets of deionized water to a plastic weighing boat, and weighing the droplets on a calibrated analytical balance (Mettler AB 135-S). Holding the pressure at 5.0 psi and the valve timing at 14.0 ms, 50 droplets were each delivered, then weighed. The valve timing was then set to 28.0 ms so that 50 additional droplets could be weighed. The weights for each group (14.0 and 28.0 ms) were binned independently into 10 adjacent bins. Fig. 5 shows the resulting histograms. The samples are tightly clustered around their mean values, 54.07 ± 0.41 and 111.62 ± 0.69 mg (mean ± S.D.), essentially eliminating any ambiguity between the two rewards sizes. The low coefficient of variance, 7.6×10^{-3} for the 14.0 ms group and 6.1×10^{-3} for the 28.0 ms group, gives a further indication of the system's delivery precision.

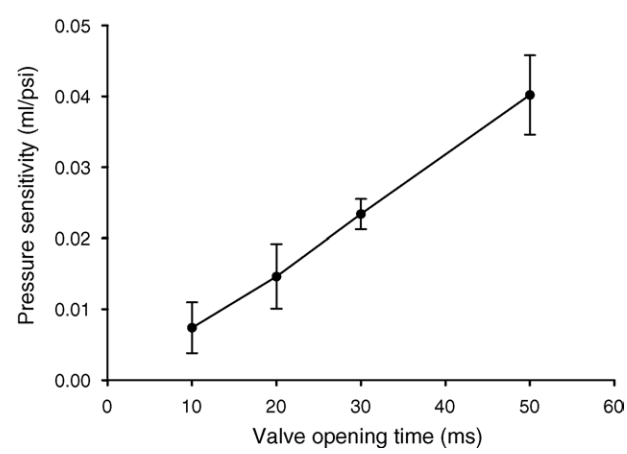

Fig. 4. Pressure sensitivity plot. Change in average delivery volume as a function of pressure change for various valve opening times was measured by delivering between 48 and 468 droplets of tap water to a graduated cylinder using 5.0, 6.0, 6.9, 8.0, 9.0, 10.0, 11.0, and 12.0 psi of air pressure. Error bars show one standard deviation.

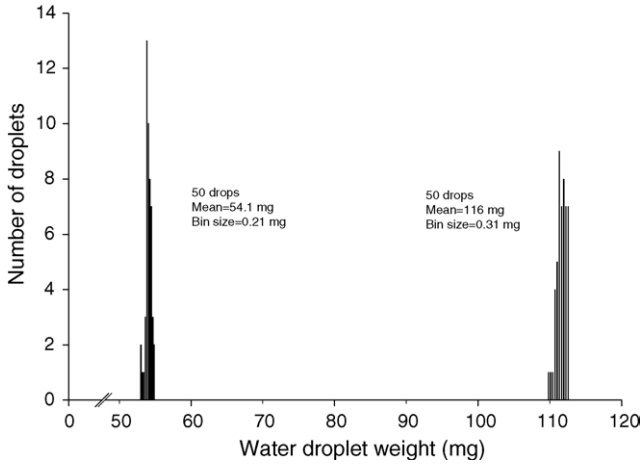

Fig. 5. Delivery precision histograms. To assess droplet-to-droplet variability 100 droplets of deionized water were dispensed, then weighed, one at a time. Air pressure was set to 5.0 psi throughout the test. Fifty droplets were dispensed using a valve opening time of 14.0 ms. The 50 droplet weights (54.07 ± 0.41 mg, mean ± S.D.) were sorted into 10 bins (bin size 0.21 mg) and plotted on the histogram. Next, 50 additional droplets were dispensed using a valve opening time of 28.0 ms. These latter weights (111.62 ± 0.69 mg) were sorted into 10 bins (bin size 0.31 mg) and plotted on the same axes as the first group of droplets. The low coefficients of variance (7.6×10^{-3} for the 14.0 ms group, 6.1×10^{-3} for the 28.0 ms group) confirm a high degree of delivery volume precision.

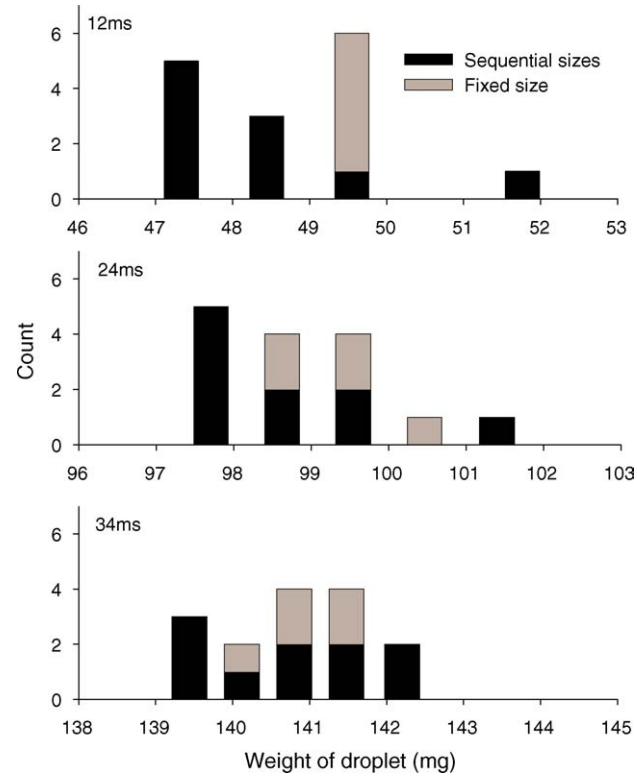

Fig. 6. History dependence of droplet size. To see if the sizes of droplets are affected by prior history, 30 droplets were delivered and weighed individually using three different valve opening durations in a rotating sequence: 12 ms → 24 ms → 34 ms → 12 ms, etc. The distributions of these sequential droplet weights (dark bars labeled *sequential sizes*) are compared to droplets delivered repeatedly at each of the same three valve opening durations (light bars labeled *fixed size*). The weights of the droplets delivered repeatedly at a fixed opening duration fall within the values obtained using sequential opening durations at all three valve opening durations. Air pressure was fixed at 5.0 psi for this series of tests.

We also tested to see if droplet-to-droplet variability is affected by the sizes of previous droplets (history effect). Thirty droplets of deionized water were delivered at 5.0 psi and weighed as before. However, the valve-open duration was changed after each delivery in a rotating series: 12 ms → 24 ms → 34 ms → 12 ms. Fifteen additional droplets, five for each valve-open duration, were then delivered as part of a series where the valve timing was held constant. Fig. 6 shows both the values collected as part of a rotating series (dark bars) and those collected with constant valve timing (light bars) for each of the three valve durations. For all three durations, the overlap of these two groups is sufficient to allay any concern that a history effect interferes with the precision of liquid-delivery.

Several liquid dispensers have been installed in our laboratory. One has been in daily use for three months, without any problems. One new unit was assembled with a faulty regulator that was discovered during testing. Otherwise, the liquid dispensers operate as expected.

4. Discussion

This report describes a new device for precision delivery of liquid reward for behavioral neurophysiology experiments. Flexible and precise reward delivery enables new opportunities for conducting neurophysiological investigations into reward-related systems in the brain and for other behavioral applications involving precise control over the volume, timing, and type of primary reinforcement. Negative liquid reinforcers could also be delivered with precision. The liquid-delivery system has a sophisticated controller to maximize flexibility and ease operation. The mechanical arrangement makes the device robust and easy to maintain.

Given this success, a number of enhancements are now under consideration. The cost of reproducing the present system is probably on the order of $3000 to $4000 per unit. That cost can be reduced using volume production methods for the controller, like replacing point-to-point wiring with a custom printed circuit board. In our intended application, more than one unit is used at a time. There may be a better way to consolidate two units into a single device with two reservoirs. Such a consolidation would reduce space and probably lower the overall cost. Another enhancement considered is the installation of a stirring motor under the reservoir bottle to allow delivery of colloidal suspensions.

The incorporation of a powerful microcontroller in the present design permits software (firmware) enhancements. The *control unit* could be programmed to automatically generate fixed interval (FI) or variable interval (VI) reinforcement schedules, or other reward patterns (e.g., twin rewards)

with flexible control through the front panel, through the parallel interface, or through the serial port interface. Remote monitoring and generation of rewards through the web interface suggests that the unit could be programmed for use in animal home cages or, with the use of a wireless network interface, in an open-field environment. With some additional hardware, the reward devices could also be programmed to recognize specific embedded ID tags and deliver specific quantities of food or medications to specific individuals in a colony.

Acknowledgement

This research was supported by the Intramural Research Program of the NIH, NIMH.

Appendix A. Contact information for suppliers

Detailed design information can be downloaded from http://dally.nimh.nih.gov. Complete units can be obtained through Micron Systems (18607 Hidden Pines Way, Hudson, FL 34667, USA, 727.808.6893) or Crist Instrument Company Inc. (111 West First Street, Hagerstown, MD 21740, USA, 301.393.8615). The user many need to program the controller depending on the supplier. Major redesign inquiries may be sent to Mr. Steve Boring, Mechatronic Solutions Inc. 653 Old Mill Road, Millersville, MD 21108, USA.

References

Cromwell HC, Schultz W. Effects of expectations for different reward magnitudes on neuronal activity in primate striatum. J Neurophysiol 2003;89:2823–38.

Fiorillo CD, Tobler PN, Schultz W. Discrete coding of reward probability and uncertainty by dopamine neurons. Science 2003;299:1898–902.

Mitz AR, Boring SA, Wise SP, Lebedev MA. A novel food-delivery device for neurophysiological and neuropsychological studies in monkeys. J Neurosci Methods 2001;109:129–35.

Tremblay L, Schultz W. Relative reward preference in primate orbitofrontal cortex. Nature 1999;398:704–8.

Watanabe M, Hikosaka K, Sakagami M, Shirakawa S. Coding and monitoring of motivational context in the primate prefrontal cortex. J Neurosci 2002;22:2391–400.